RECYCLED PARTS REQUEST FORM

For your convenience, these forms were developed to improve communication between collision repair facilities and recyclers. Use the following forms to identify the recycled parts and sections needed.

DIRECTIONS:

1. Use this document as a master and copy pages as needed.
2. Fill out the upper portion of the form with all available information.
3. Use the diagrams to circle the exact section required. Use lines to mark the location of cuts on the side, top, and underbody views.
4. Use the space provided to include any addition information or sectioning specifications.

EXAMPLE:

Recycled Parts Request: **4-DOOR UNIBODY FORM**

Date: 5/14/07

To: Smith Recyclers
Contact Person: Joe Smith
Phone #: (123) 456-7890
Year: 2001
Model: Corolla
P.O. #: GH-123

From: ABC Auto Body
Contact Person: John Doe
Fax #: (345) 678-9012
Make: Toyota
VIN #: 1A2BC34D567890123
Build Date: 5/30/07

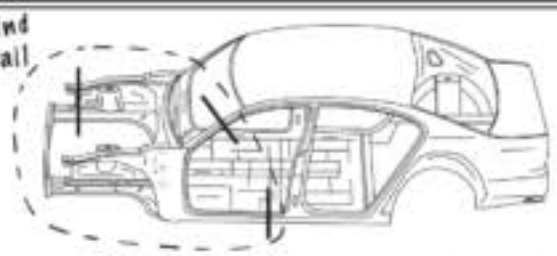

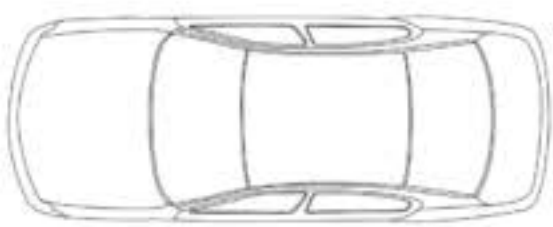

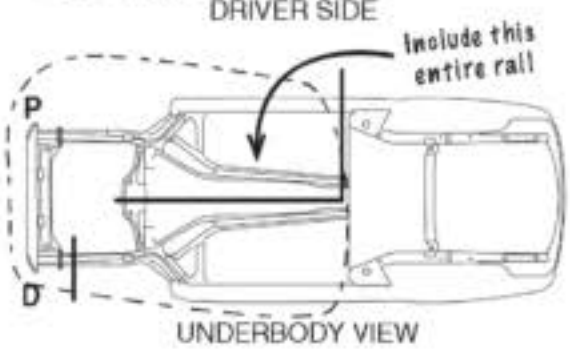

Please use the area below for a detail of cut instructions:

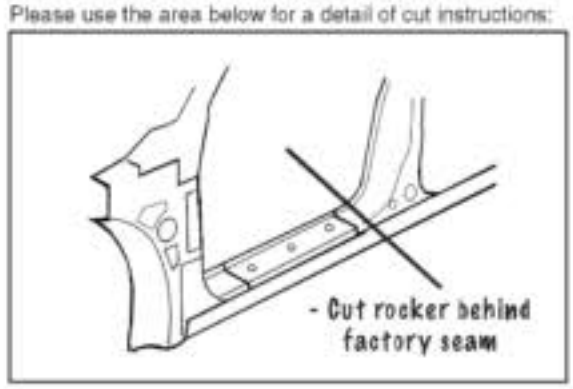

Notes:
- Cut pillar 2" above center

© 2007 Inter-Industry Conference On Auto Collision Repair

© 2007 Inter-Industry Conference On Auto Collision Repair